4-6 EXTENSION DINING TABLE

⚠WARNING!

* PLEASE REMOVE LEAF PANEL BEFORE ASSEMBLY.

(1) LAY TABLE ON A FLAT, STABLE, CLEAN AND SOFT SURFACE (**DO NOT REMOVE PS. FOAM**).

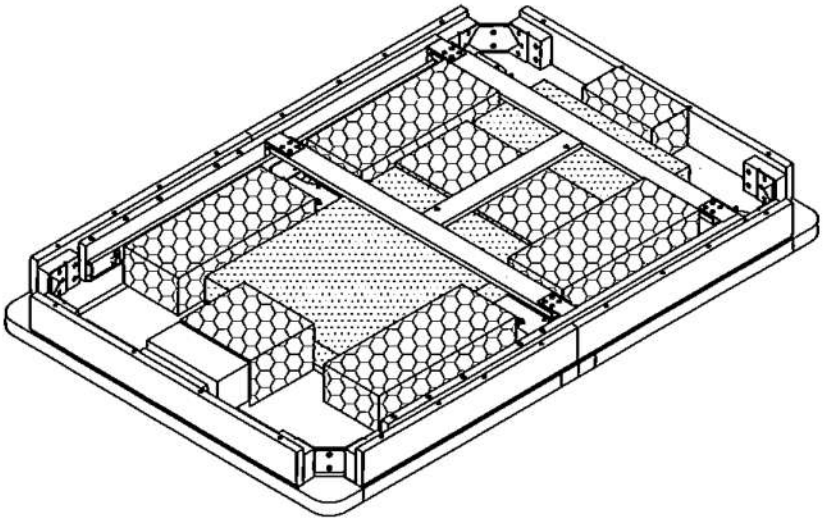

(2) REMOVE PS. FOAM AND SLIDE OPEN.

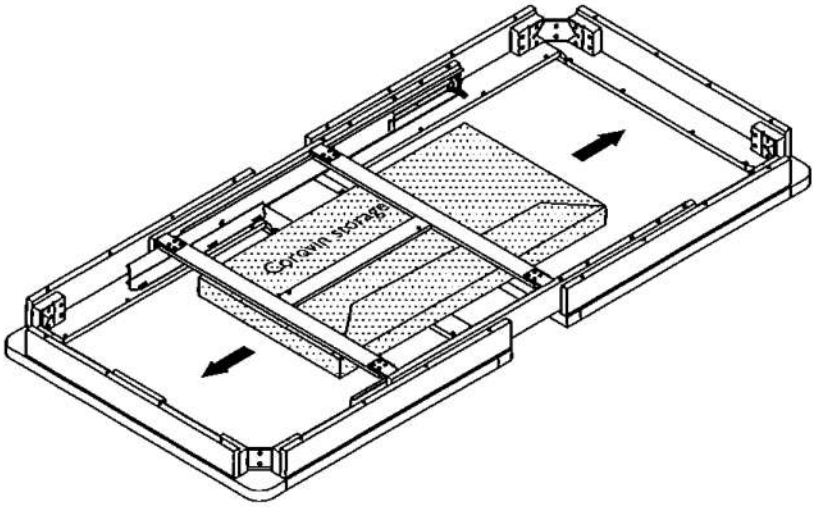

(3) REMOVE LEAF CAREFULLY.

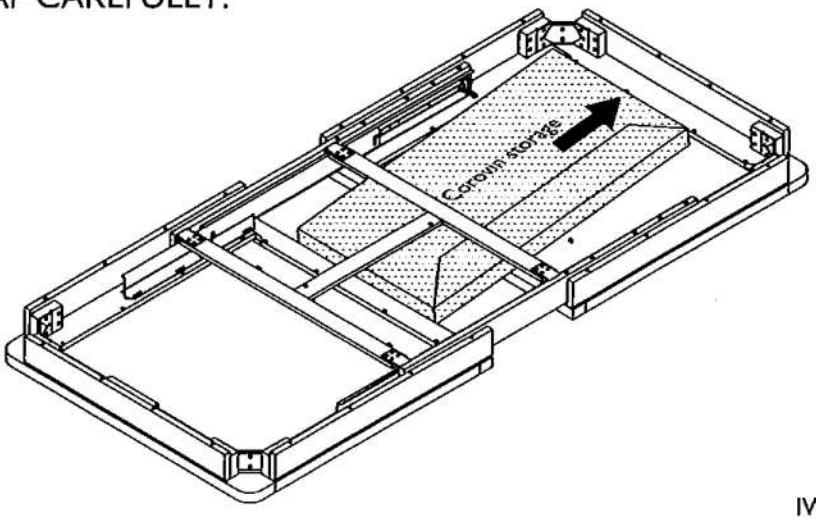

4-6 EXTENSION DINING TABLE

Stock number: 410X-2

Thank you for purchasing this product. Please read the instructions carefully before use to ensure safe and satisfactory operation of this product.

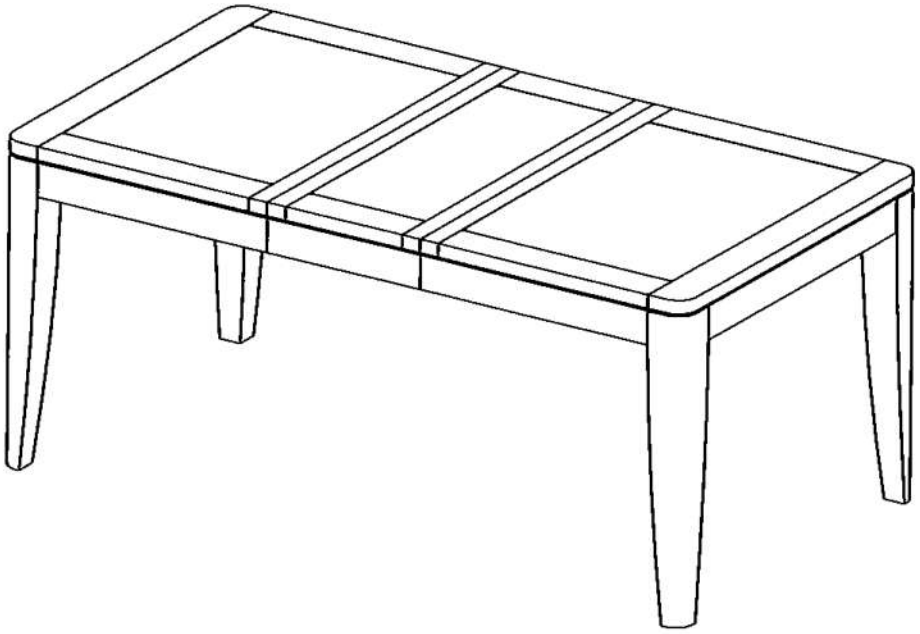

Pre-assembly preparation

Please ensure instructions are read in full before attempting to assemble this product.

Necessary Tools

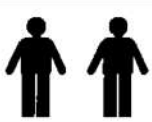

(Included)

A cross head screwdriver only should be used to assemble this product, an electric drill may cause damage to the product and is not recommended.

Please check the pack contents before attempting to assemble this product. A full checklist of components is given in this leaflet. If any components are missing, please contact the retailer from whom you bought this product.

This product takes approximately **30 MINUTES** to assemble with **2 PEOPLE.**

All assembly should be performed on a flat, stable, clean and soft surface.

This product is **HEAVY**, it should be assembled as near as possible to the point of use. **TAKE CARE WHEN LIFTING** to avoid personal injury and (or) damage to the product

The fitting pack contains **SMALL ITEMS** which should be **KEPT AWAY FROM YOUNG CHILDREN.**

IMPORTANT: Retain these instructions for future reference.

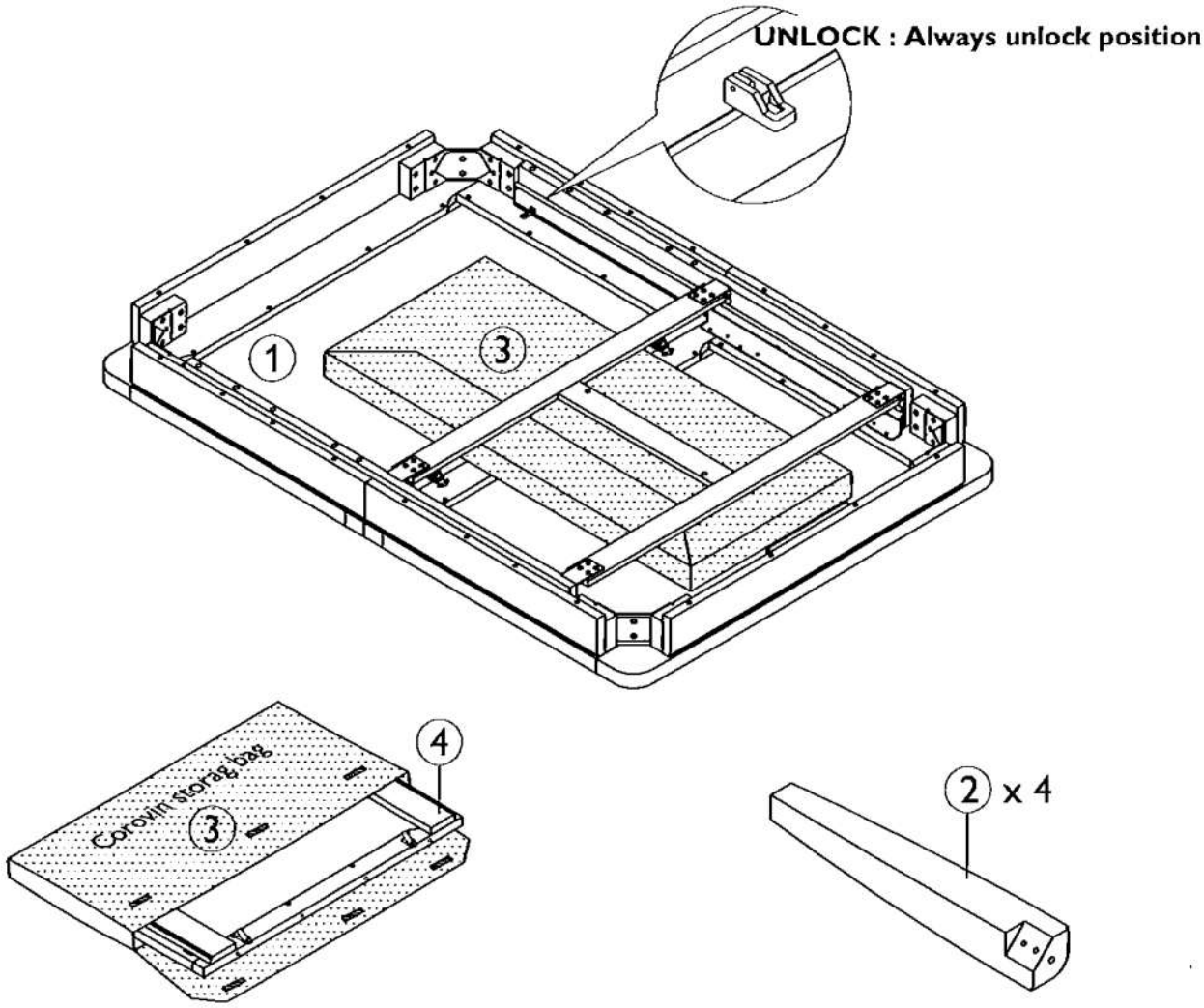

Fittings and parts checklist

Item	Description	Qty.	Item	Description	Qty.
1	Table top	x 1	3	Corovin storage bag	x 1
2	Leg	x 4	4	Leaf	x 1
A	Cross dowel	x 4	D	Lock washer	x 8
B	Threaded bolt	x 8	E	Hex nut	x 8
C	Flat washer	x 8	F	Spanner	x 1

Step By Step Assembly Instructions

Step 1

1.1 : Lay all parts on a flat, stable, clean and soft surface.
1.2 : Insert 4x cross dowels (A) into the holes on top of each leg (2) as shown. Ensure the horizontal marking on each fitting (A) is facing as shown.
1.3 : Screw 8x threaded bolts (B) into the two holes on the bevel of each leg then tighten them into the holes of fitting (A) that is concealed in each leg (2) as shown.

Fitting

A x 4

B x 8

Step 1.2

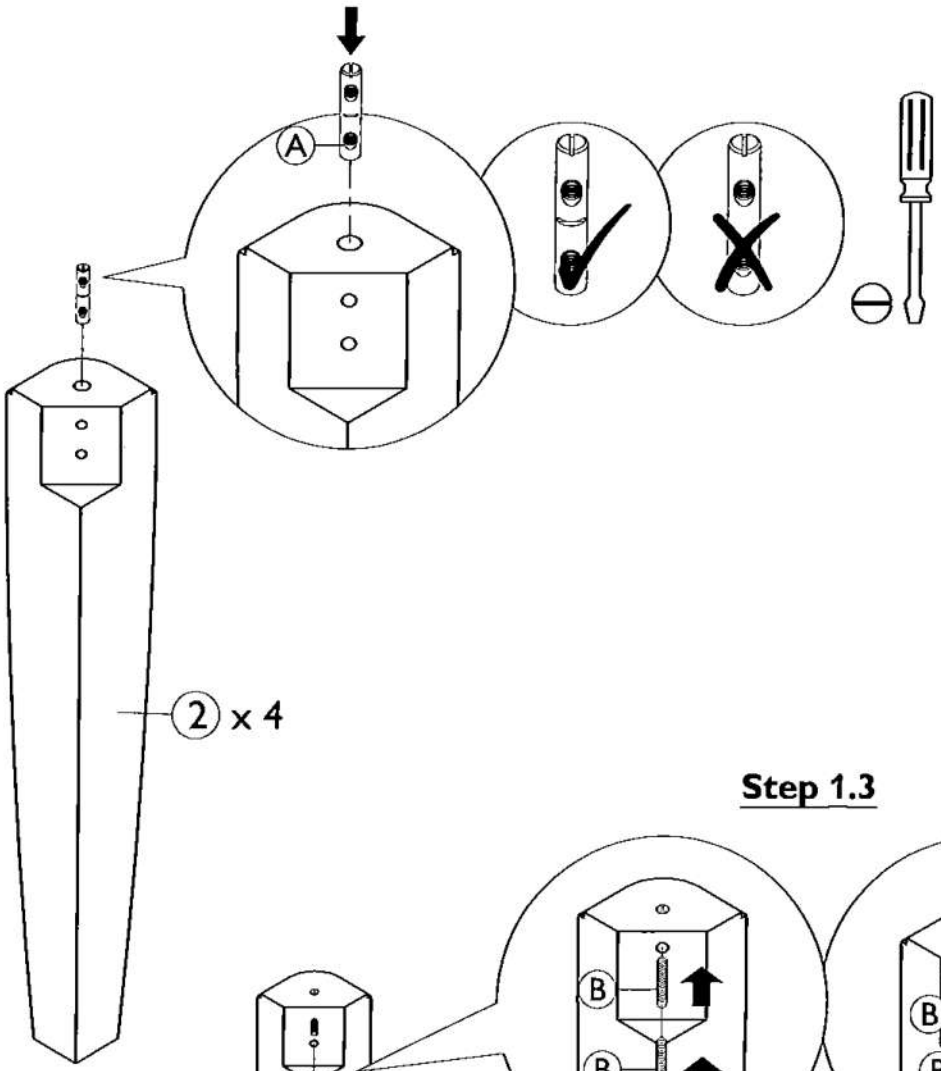

Step 1.3

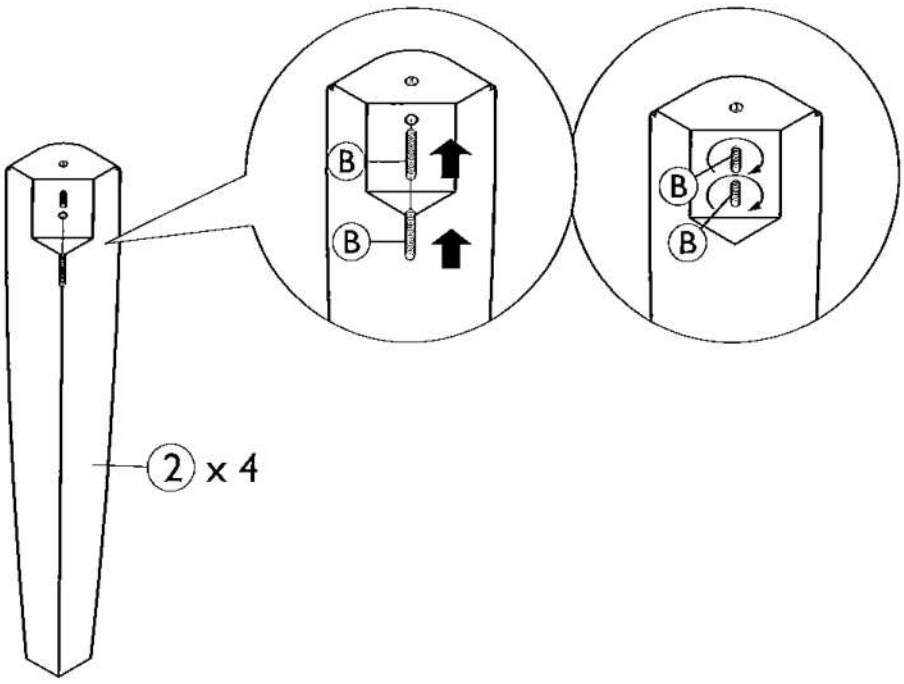

Step By Step Assembly Instructions

Step (2) Extend both sides of the main table top completely then remove the corovin storage bag (3) as shown.

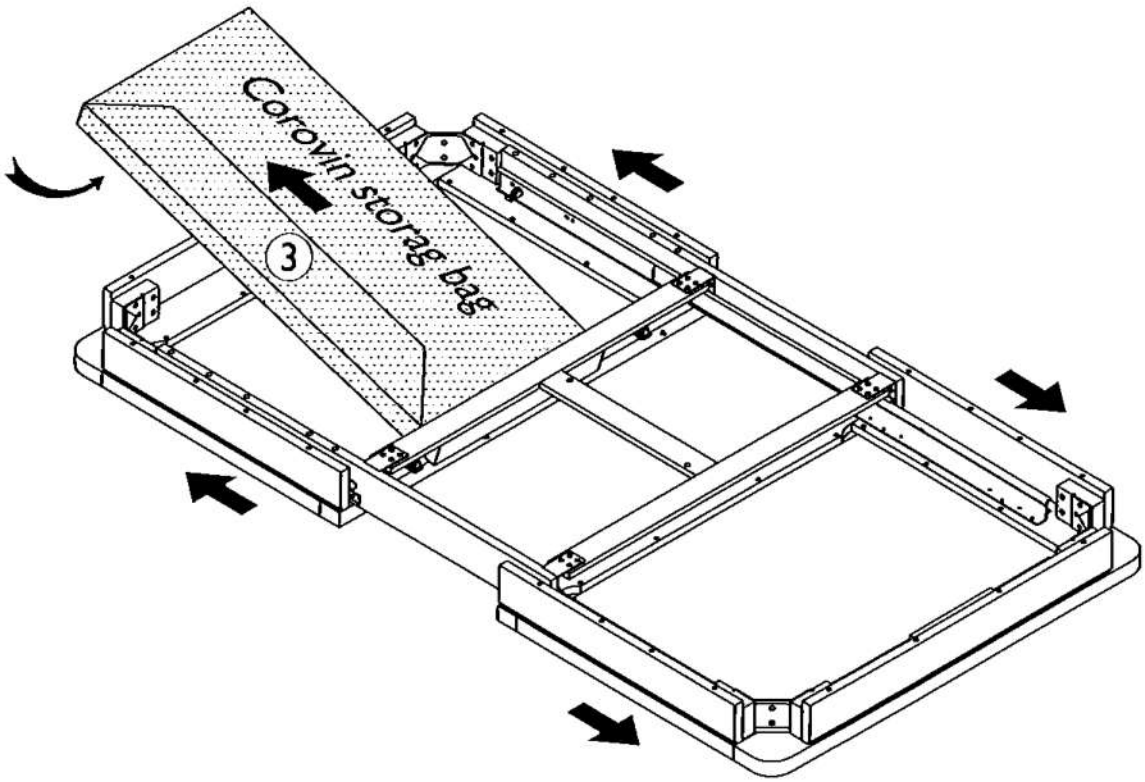

Step By Step Assembly Instructions

Step (3) With the help of assistant, lay the table top (1) on a flat, stable, clean and soft surface.

3.1 : Close table top and lock the latch lock as shown.

3.2 : Attach each leg (2) onto table top by inserting threaded bolts (B) into the pre-drilled holes of each metal corner bracket as shown.

3.3 : Insert flat washers (C), lock washers (D) and hex nuts (E) onto threaded bolts (B) on legs (2) and in order as shown - (C) followed by (D) followed by (E). Tighten hex nuts (E) using spanner (F) as shown. Continue to re-tighten hex nuts (E) until they are securely fastened. **Repeat above procedures with the remaining legs (2).**

Fitting

C x 8

D x 8

E x 8

F x 1

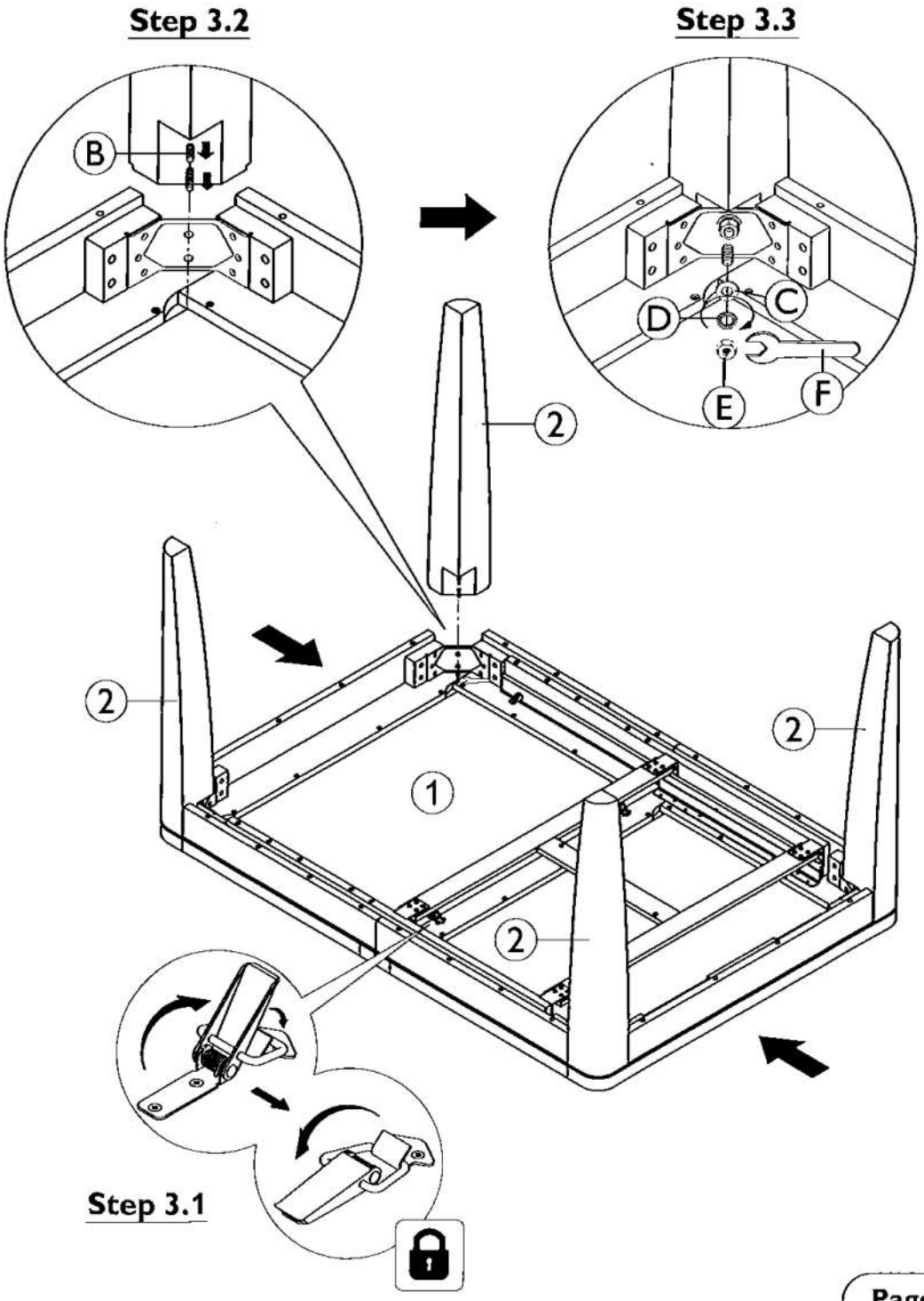

Step By Step Assembly Instructions

Step (4)

Important : Ensure you have already locked the latch lock before righting the table.
Note : When moving the table, remove leaf, close table top and lock the latch lock, then move by gripping or lifting the legs or underframe.
Caution : This product is heavy, with help of assistant stand the table upright.

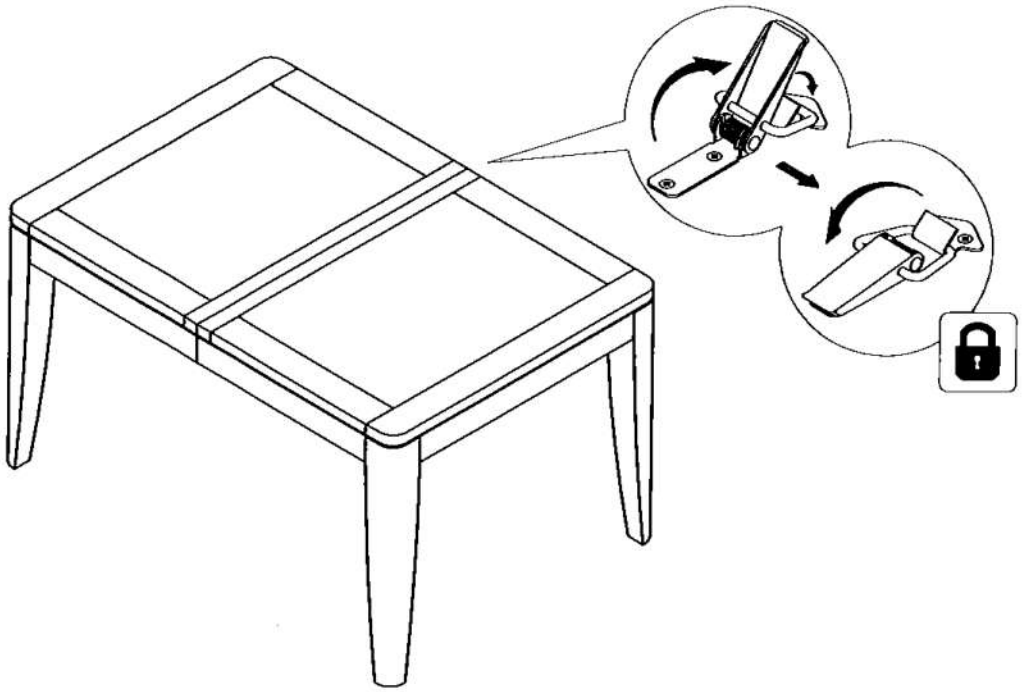

Step (5)

5.1 : Place storage bag (3) and leaf (4) onto a flat, stable, clean and soft surface.
5.2 : Remove leaf (4) and fold open the leaf aprons as shown.

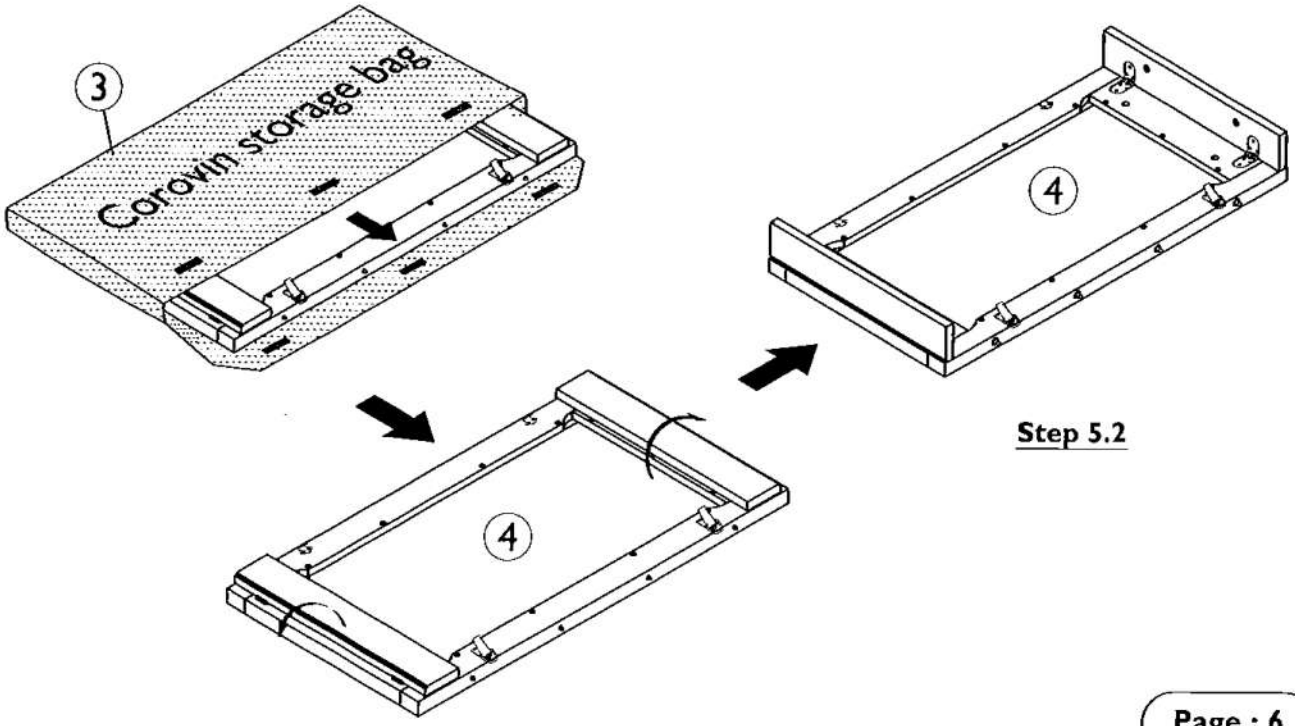

Step 5.2

Step By Step Assembly Instructions

Step 6

6.1 : Unlock the latch lock that were locked in **Step 3.**

6.2 : Extend the table by lifting up the end apron, then slide the structure all the way out as shown.

6.3 : Place leaf (4) over the side aprons and slide leaf (4) to main table top until no gap is visible as shown.

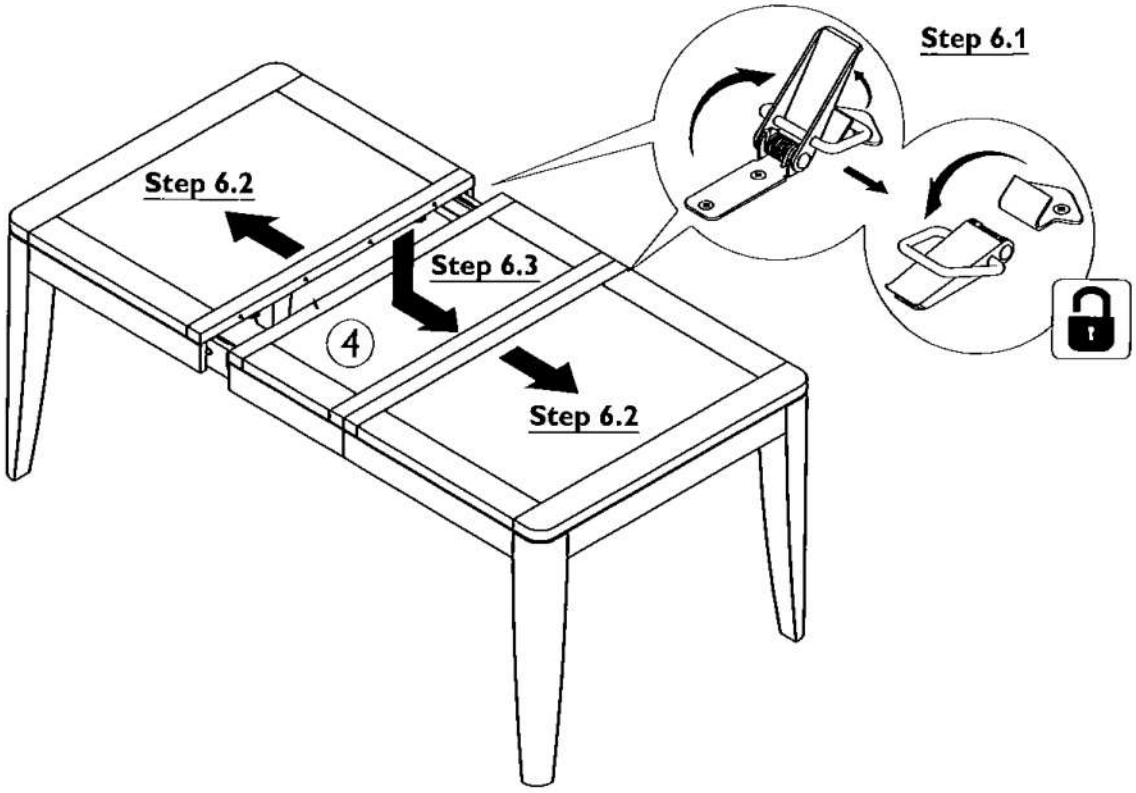

Step 7

7.1: Push end apron inwards until no gap is visible.

7.2: Lock the latch lock.

Note: Ensure the metal pins are aligned to the holes on the main table tops and the leaf before closing the table.

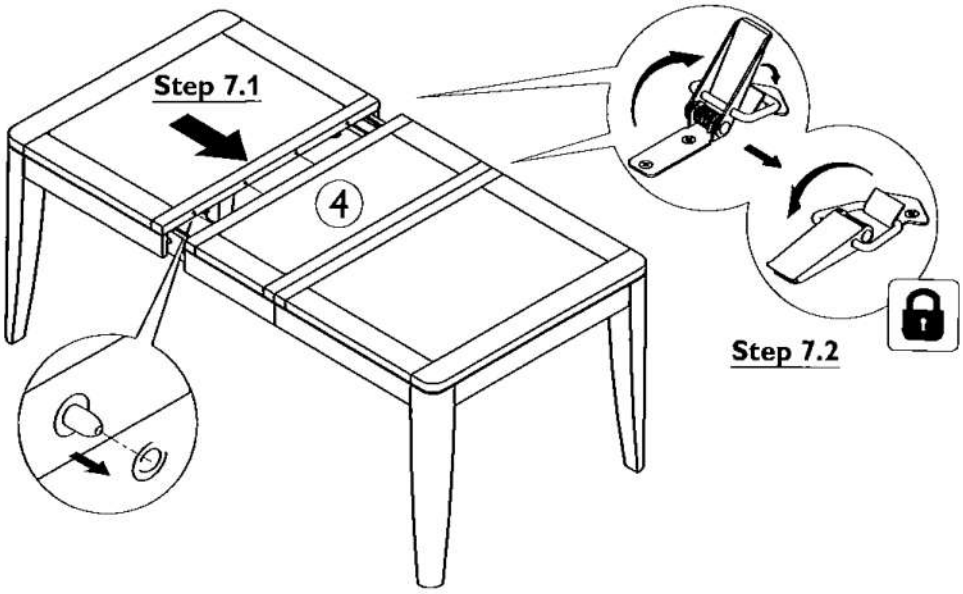

Step By Step Assembly Instructions

Step 8

Remove the leaf

8.1 : Unlock the latch lock that were locked in **Step 7.**

8.2 : Extend the table by lifting up the end apron, then slide the structure all the way out as shown.

8.3 : Remove leaf (4).

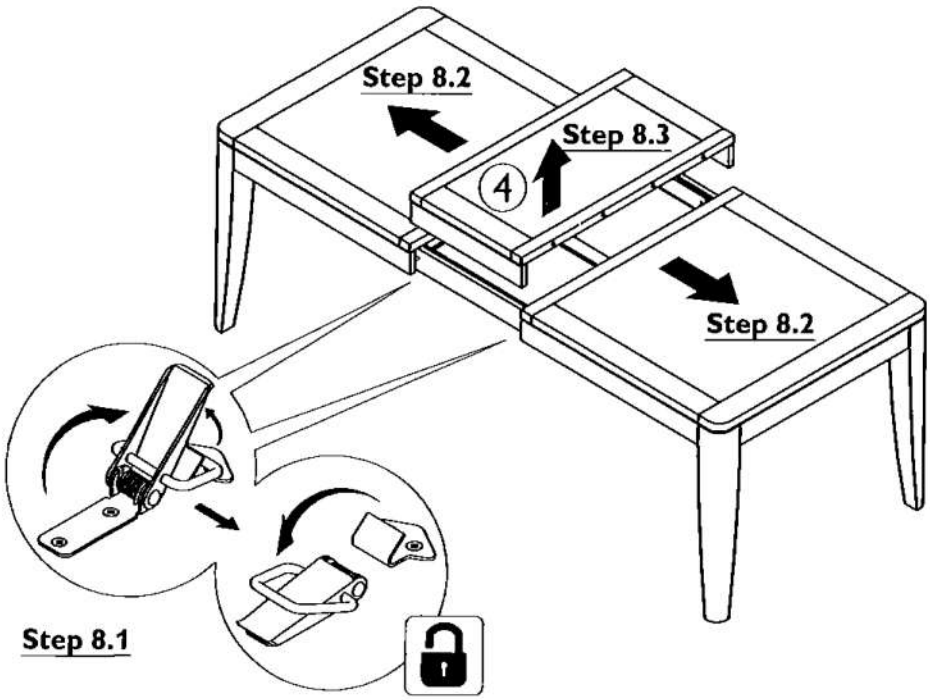

Step 9

9.1 : Place leaf (4) and corovin storage bag (3) onto a flat, stable, clean and soft surface.

9.2 : Fold down the leaf aprons then place the leaf (4) into corovin storage bag (3) as shown.

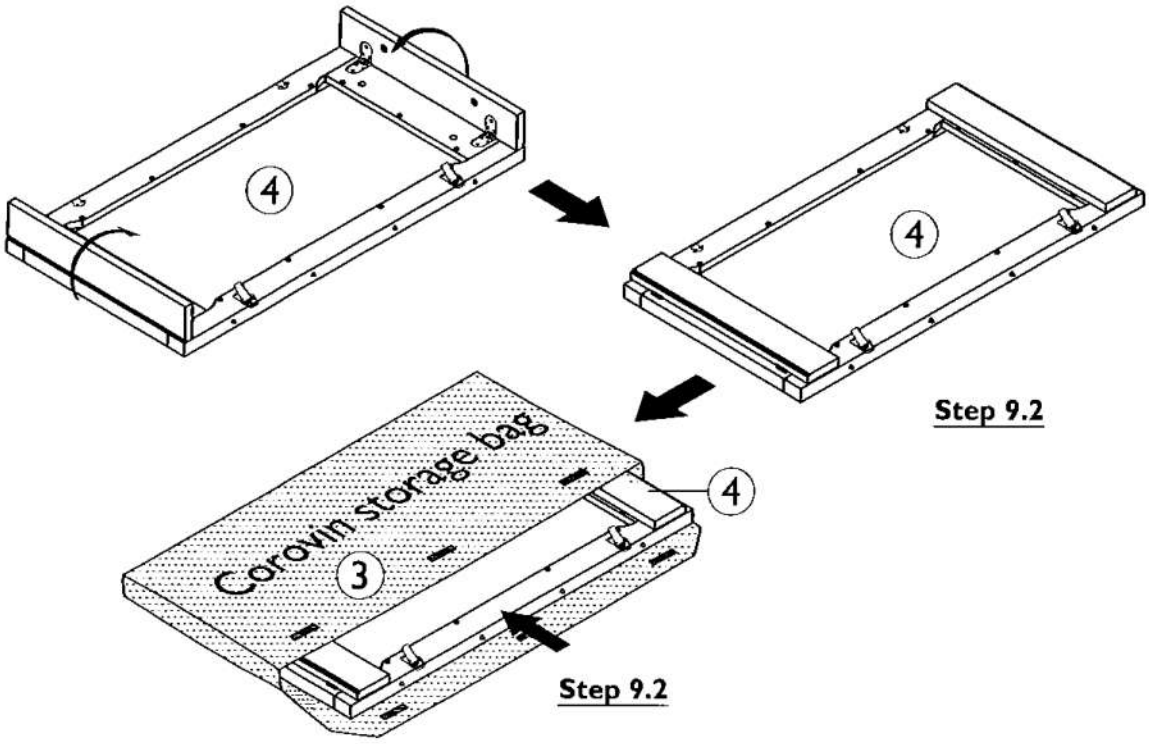

Step By Step Assembly Instructions

Step (10)

10.1 : Carefully place corovin storage bag (3) with leaf (4) onto wood support storage under table top as shown.

10.2 : Close the table by lifting up the end apron, then slide the structure all the way in as shown. Ensure the metal pins on both table tops (1) are aligned correctly with the mating holes before closing.

10.3 : Ensure that you have locked the latch lock after closing the table.

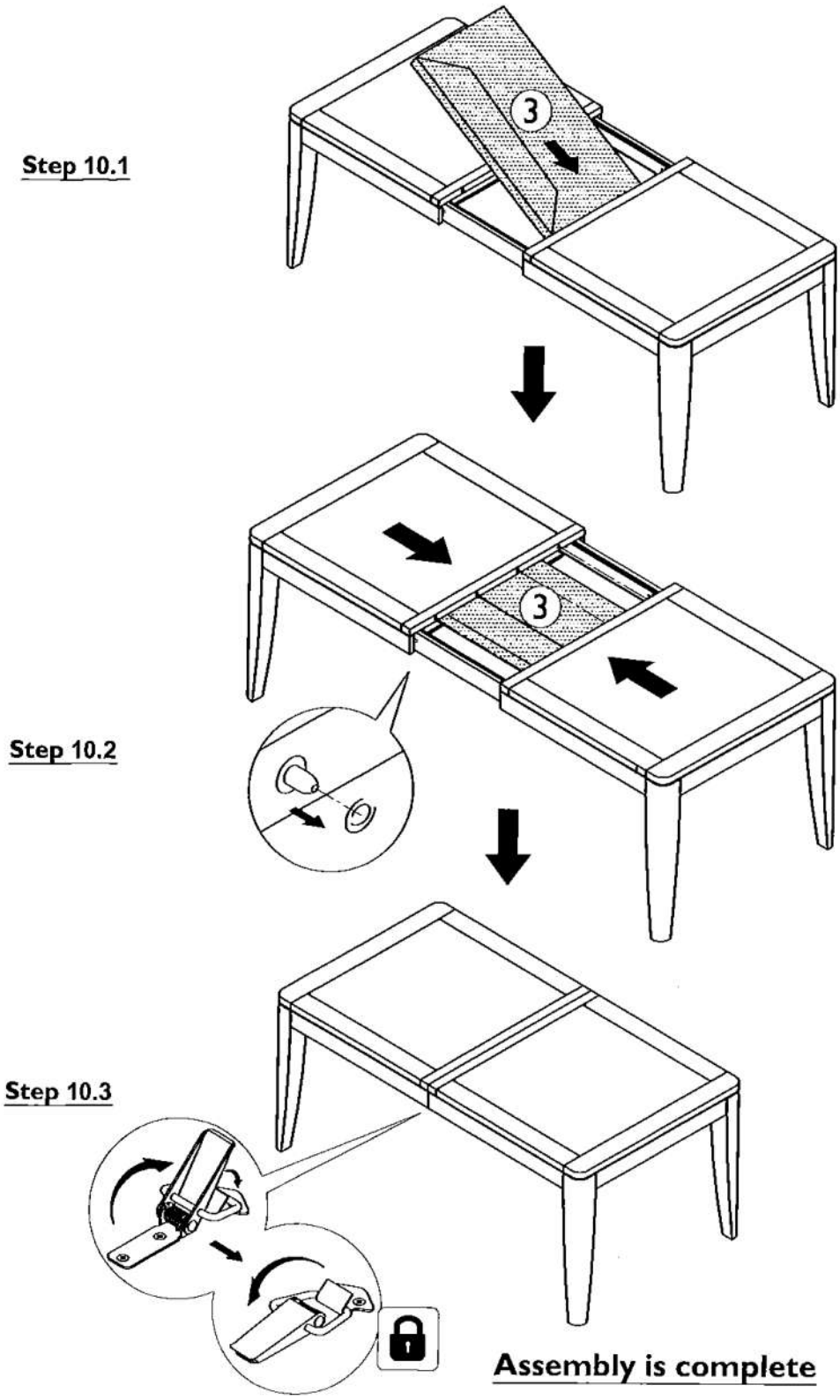

Care and Maintenance

Wood Furniture

Wood displays different grain patterns depending on which way they are cut - for example, the 'medullary ray' which can appear on oak furniture is a mark of good quality timber - these are just characteristics of the natural beauty of the wood.
Some furniture is also deliberately aged and rustic.
Wood veneers also allow distinctive patterns to be created on some surfaces, such as table tops and drawer fronts by the way slivers are arranged.
All timber and veneer surfaces will change colour and mellow over time. New furniture will initially vary in shade from items that have been previously purchased.

How to care for your wood furniture

Dust with a clean, damp, lint free cloth. Frequent dusting will remove abrasive build up, which can damage the finish over time.
Do not use a very wet cloth or allow any liquid to contact with the veneers for a long period of time as this can permanently damage the surface. Wipe up spills immediately.
Do not use any abrasive cleaner or harsh detergent as this can damage the surface of the furniture.
Spray polishes are best avoided as they contain silicones which may spoil the furniture's surface when building up over time.
Make sure all surfaces are protected from heat and liquids by mats and coasters.
Ensure that a mat or pad is placed under paper when you are writing on the furniture surface.
Do not place rubber, cork, vinyl or plastic materials on the wood finish as chemicals within may react with the finish if left in contact for an extended period of time.
Our furniture will endure most temperatures in the home but it is best to avoid placing furniture next to heat sources such as radiators or fires. Be particularly careful with solid wood as the lack of humidity caused by home heating can cause damage such as warping, cracking or splitting.
Excessive exposure to sunlight can cause fading of your furniture.
Avoid exposing your furniture to any liquids. All liquids should be wiped up immediately with a soft, slightly damp cloth in the direction of the wood grain. If sticky liquid residues do occur, they may be removed with a dilute solution of warm soapy water followed by a clean, damp sponge. The area should then be wiped immediately in the direction of the wood grain with a clean, soft white cloth until completely dry.
Nail polish remover, hairspray, perfume, potpourri & any other products that contains solvents can damage wood upholstery finishes.

Safety Instructions:

Never drag furniture when moving it. Always lift it.
Periodically check all fixings to ensure none have come loose. Re-tighten when necessary.
Please take care when handling or moving the furniture as careless handling may cause damage or injury.
Furniture can be dangerous if incorrectly assembled. Assembly should be carried out by a competent person.
No liability will be accepted for damage or injury caused by incorrectly installed or assembled furniture.

Heavy item warning:

It is recommended to seek assistance when moving a heavy object. Take care when lifting to avoid personal injury and (or) damage to the product.
It is recommended that before moving a heavy object to a new location it is completely dis-assembled to avoid personal injury or damage to the furniture. Please be careful to retain all fittings when doing this.

PLEASE KEEP THESE INSTRUCTIONS FOR FUTURE REFERENCE

PDR # 10365

04/08/17

07 AUG 2017

04.08.17