WIDE SIDEBOARD

Stock number: 9120/9121-15

Thank you for purchasing this product. Please read the instructions carefully before use to ensure safe and satisfactory operation of this product.

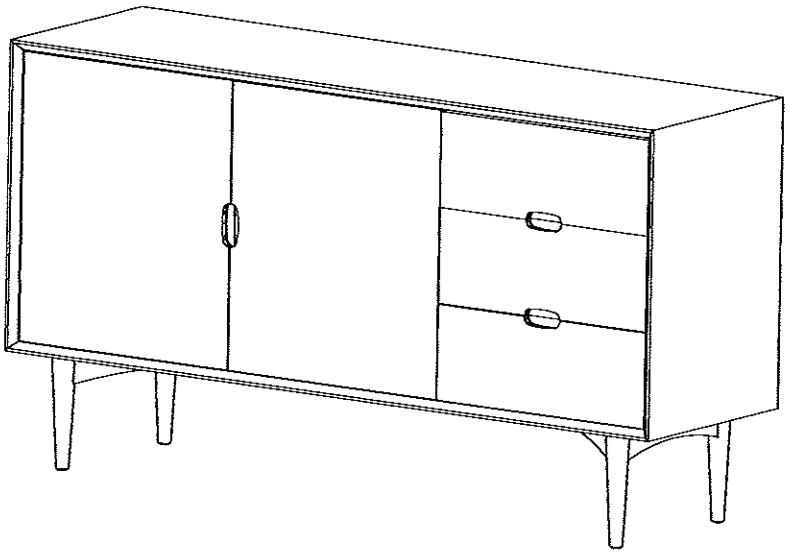

Pre-assembly preparation

Please ensure instructions are read in full before attempting to assemble this product.

Necessary Tools

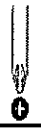

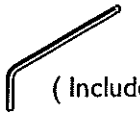

(Included)

Please check the pack contents before attempting to assemble this product. A full checklist of components is given in this leaflet. If any components are missing, please contact the retailer from whom you bought this product.

This product takes approximately 30 MINUTES to assemble with 2 PEOPLE.

All assembly should be performed on a flat, stable, clean and soft surface.

This product is HEAVY, it should be assembled as near as possible to the point of use. TAKE CARE WHEN LIFTING to avoid personal injury and (or) damage to the product

The fitting pack contains SMALL ITEMS which should be KEPT AWAY FROM YOUNG CHILDREN.

IMPORTANT: Retain these instructions for future reference.

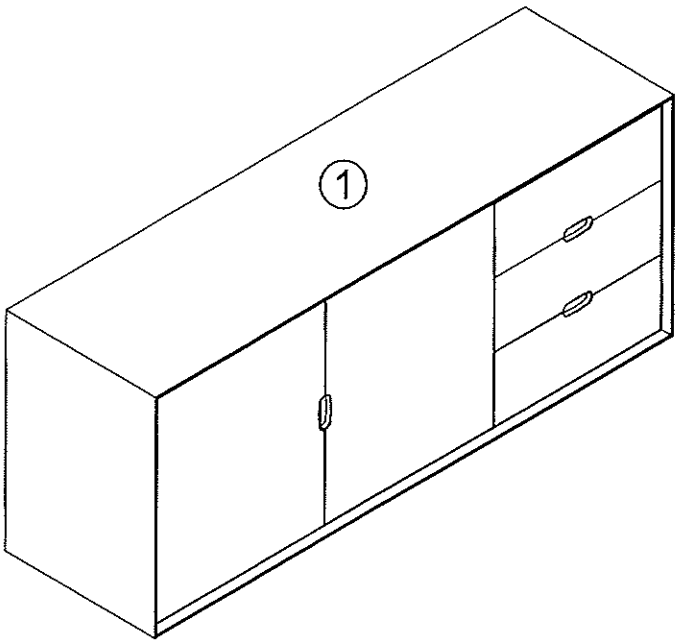

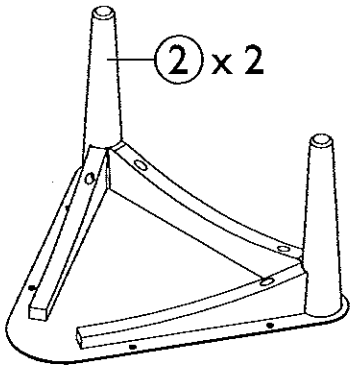

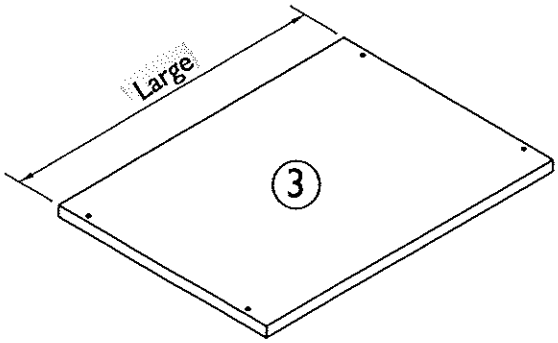

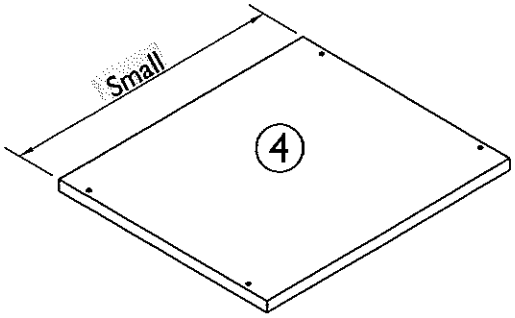

Fittings and parts checklist

Item	Description	Qty.	Item	Description	Qty.
1	Drawer box unit	x 1	3	Left shelf	x 1
2	Leg frame	x 2	4	Right shelf	x 1
A	Wood shelf support 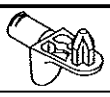	x 8	aa	Mounting plate	x 2
B	Hex head bolt Ø6 x 15	x 12	bb	Nylon strap 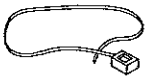	x 1
C	Allen key 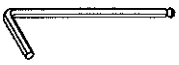	x 1	cc	Flat head screw Ø4 x 15mm	x 2

Step By Step Assembly Instructions

Step 1

1.1 : Lay drawer box unit (1) on a flat, stable, clean and soft surface.
1.2 : Position both leg frames (2) onto the pre-drilled holes on drawer box unit (1) as shown.
Ensure the pre-drilled holes on leg frames (2) are aligned correctly with the pre-drilled holes on drawer box unit (1) before attaching.
1.3 : Secure both parts (2) to part (1) using 12x hex head bolts (B) as shown.
Use allen key (C) to turn fittings (B) clockwise to fix.
Continue to re-tighten fittings (B) until they are securely fastened.

Fitting

B x 12

C x 1

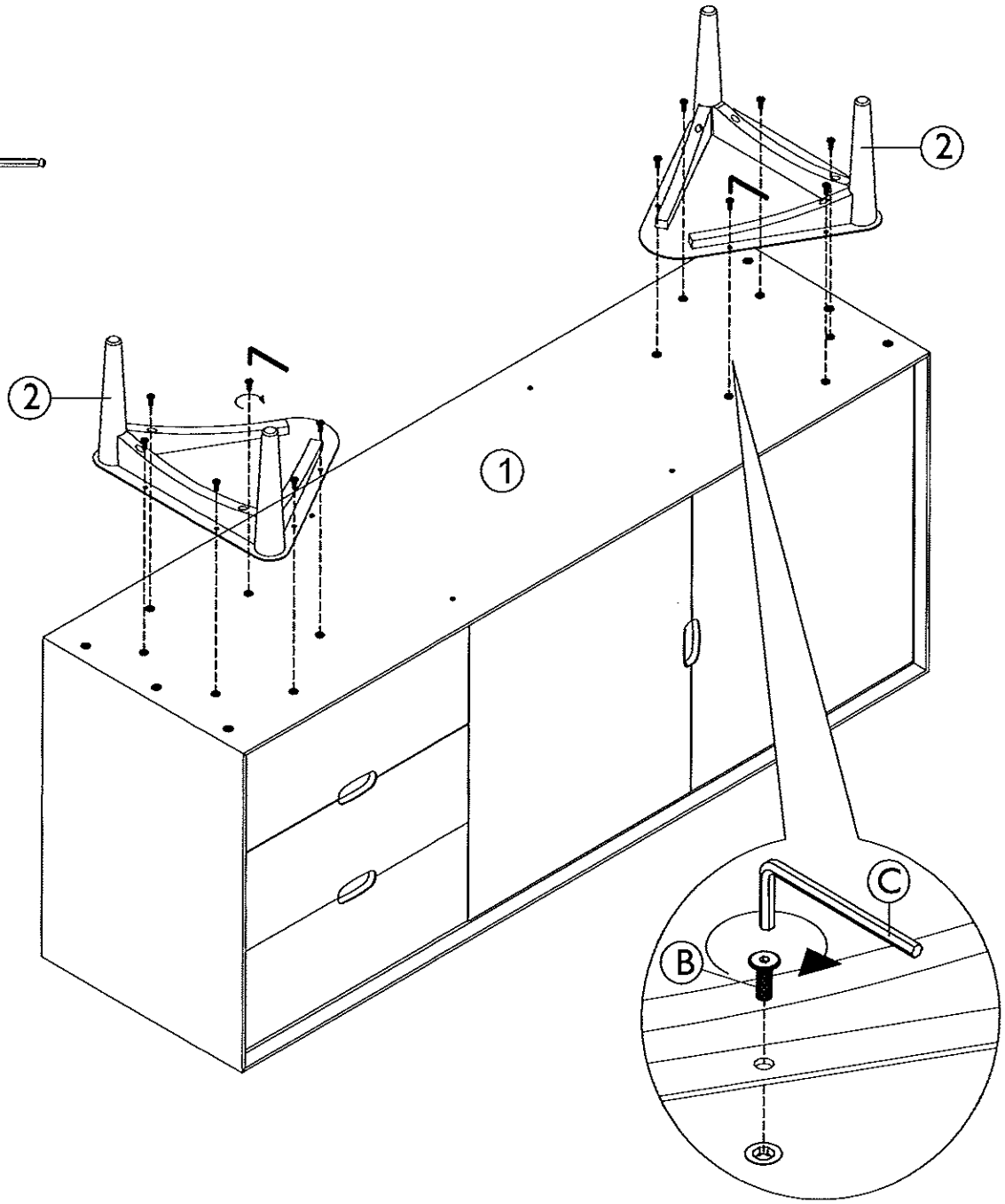

Step By Step Assembly Instructions

Step 2

2.1 : With help of assistant, carefully stand the unit upright.
2.2 : Insert 8x wood shelf supports (A) into the pre-drilled holes inside the unit as shown.
2.3 : Tilt left & right wood shelves (3), (4) to a suitable angle as shown in the picture so as to slide them in.
2.4 : Slide shelves (3), (4) into the unit. Ensure the holes on both shelves are facing down, then place them onto the pins of wood shelf supports (A) as shown.

Fitting

A x 8

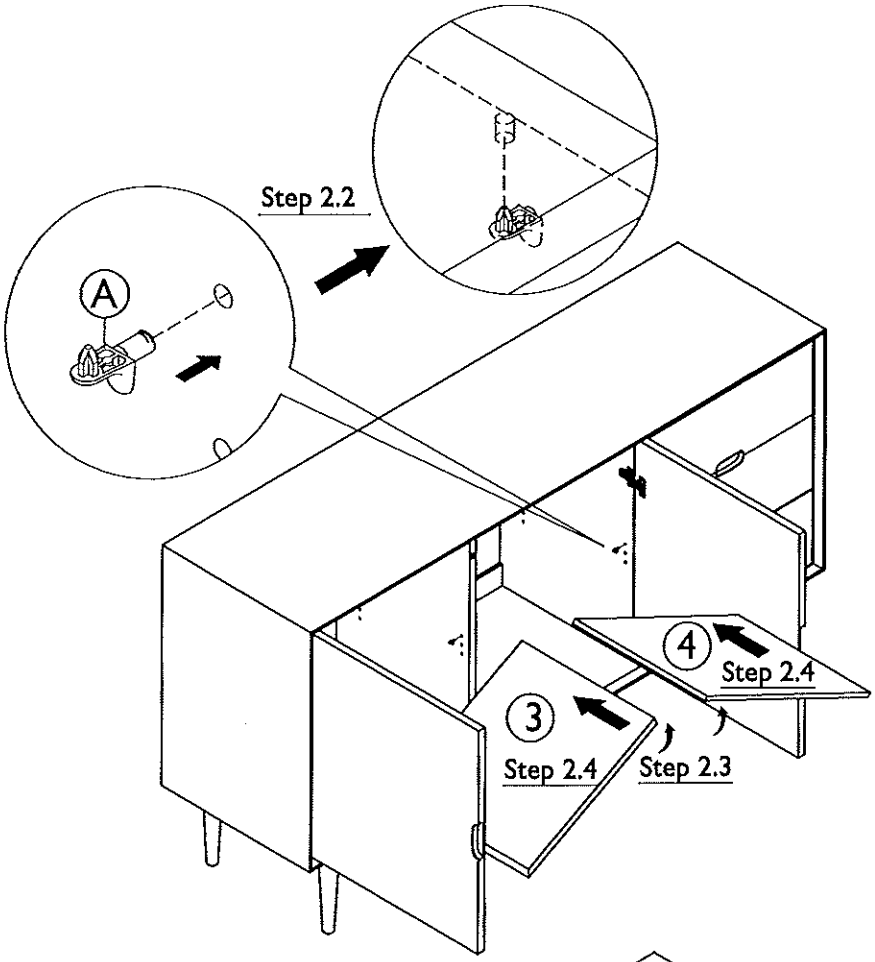

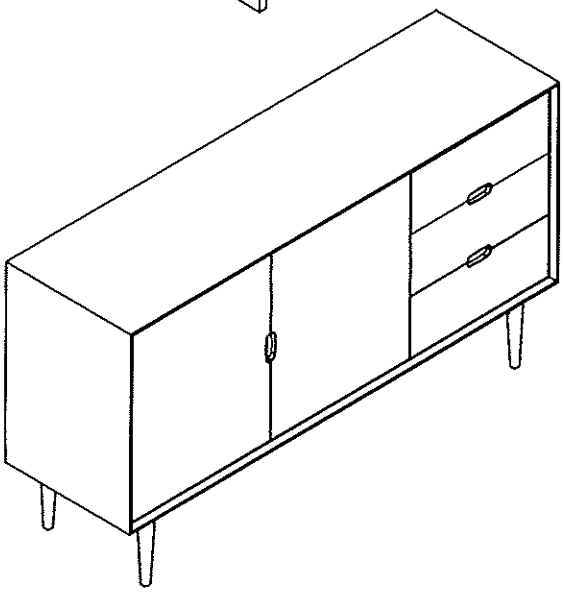

Assembly is complete

HINGE ADJUSTMENT INSTRUCTIONS

LATERAL ADJUSTMENT
by screw adjustment.

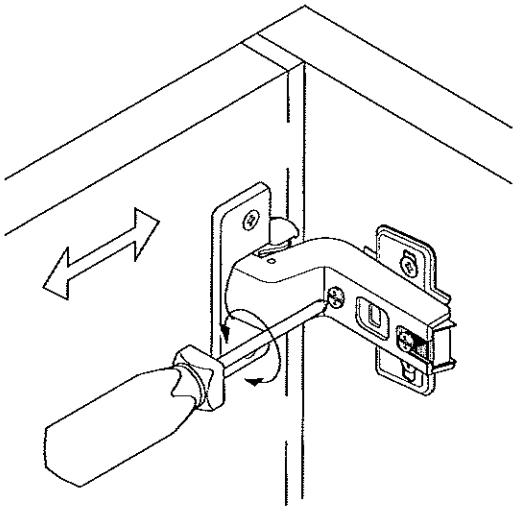

FRONT-TO-BACK
by slackening and retightening
the hinge-arm mounting screw.

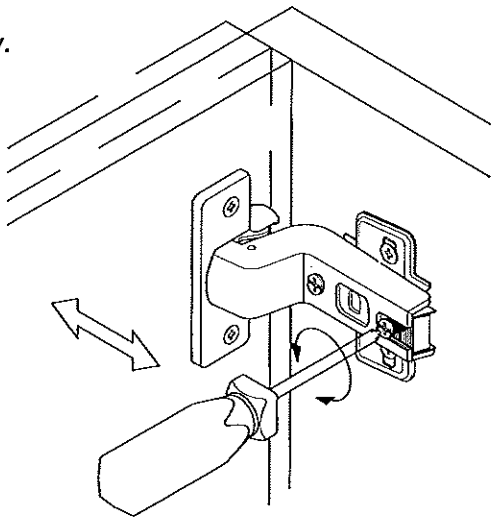

VERTICAL ADJUSTMENT
via slots on mounting plate
by slackening and
retightening the screws
on mounting plate

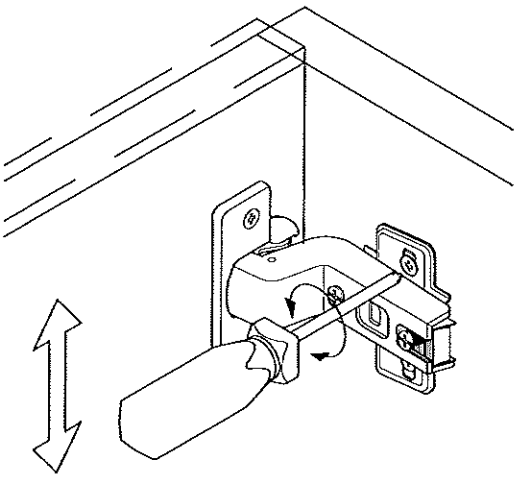

Hinge adjustment instructions

LATERAL ADJUSTMENT
by screw adjustment.

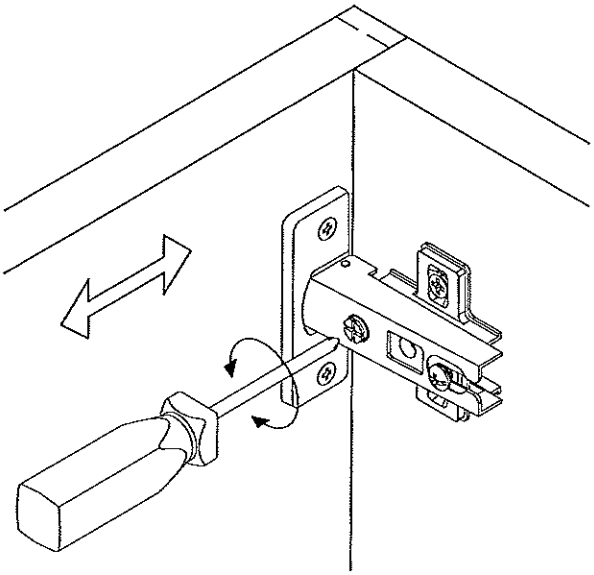

FRONT-TO-BACK
by slackening and retightening
the hinge-arm mounting screw.

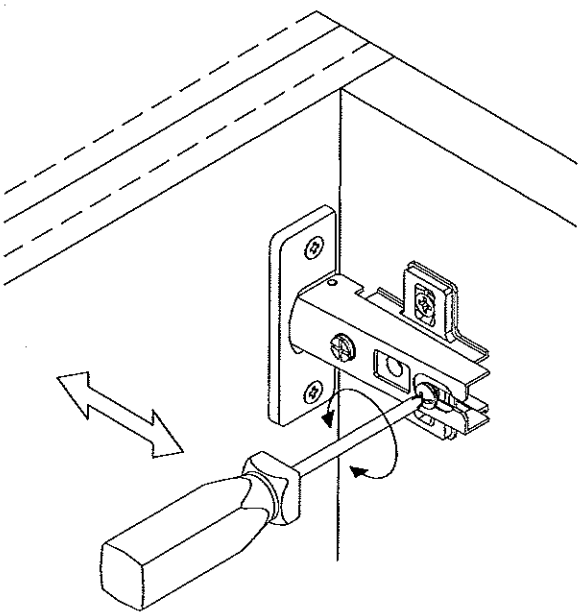

VERTICAL ADJUSTMENT
via slots on mounting plate by
slackening and retightening the
screws on mounting plate

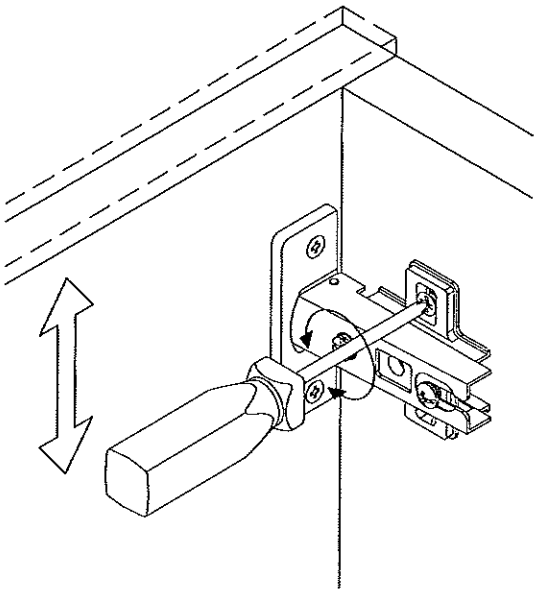

TIP KIT INSTRUCTIONS

Notice:

Notice: To prevent injury and property damage from unexpected tipping of furniture, we highly recommend installation of the anti-tip kit included with this product.

Attaching furniture to wall with anti-tip kits

1. Determine where the piece is to be placed and mark location on the wall for the mounting bracket screw holes. They should be placed approximately 1" below the top on the back of the piece of furniture.
2. Drill the hole and use the appropriate wall plug that is suitable for your walls composition.
   Warning: Before drilling check wall for hidden pipes and cables.
3. Attach the mounting bracket vertically to the wall using appropriate fastener, through the holes in the bracket and 2 wall plugs that are suitable to your wall and then tighten securely.
4. Next using the short screws attach the 2nd bracket to the back of the piece of furniture's top.
5. Lace the nylon strap down through the brackets. Slide the thin end of the strap through the receiving end on the nylon strap. Pull to tighten the piece of furniture snug against wall.

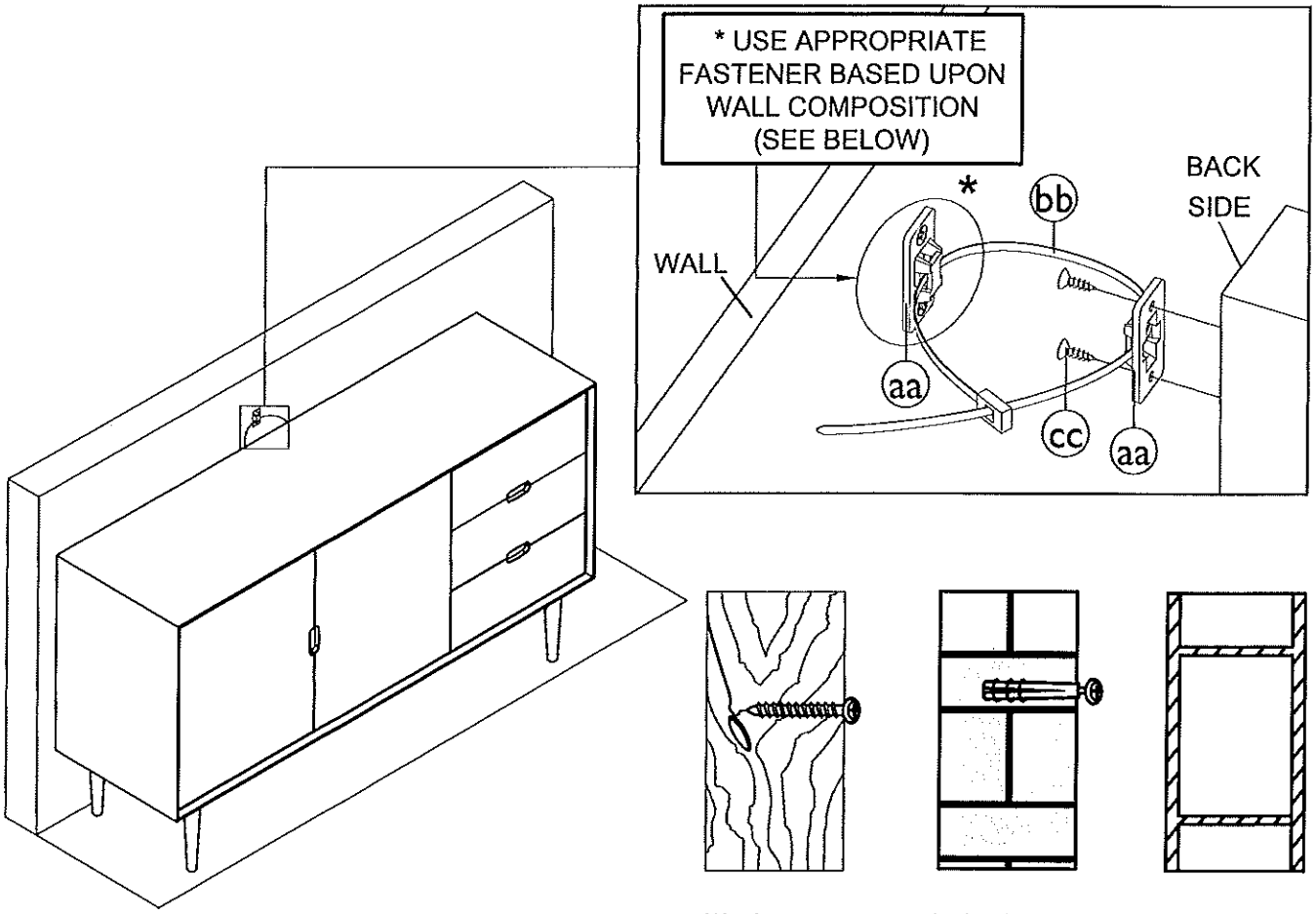

Wood
If fixing to wood make sure that it isn't chipboard as screws can easily pull away from the core structure

Brick or Masonry
Use an appropriate wall plug provided you are sure your wall is sound.

Cavity wall
Special toggle wall plugs are needed. Seek expert advice

CARE INSTRUCTIONS:

1. Hardware may loosen overtime. Periodically check that all connections are tight and re-tighten as necessary.
2. Wipe with a soft, dry cloth. To protect finish, avoid the use of chemicals and household cleaners.

Care and Maintenance

Wood Furniture

Wood displays different grain patterns depending on which way they are cut - for example, the 'medullary ray' which can appear on oak furniture is a mark of good quality timber - these are just characteristics of the natural beauty of the wood.
Some furniture is also deliberately aged and rustic.
Wood veneers also allow distinctive patterns to be created on some surfaces, such as table tops and drawer fronts by the way slivers are arranged.
All timber and veneer surfaces will change colour and mellow over time. New furniture will initially vary in shade from items that have been previously purchased.

How to care for your wood furniture

Dust with a clean, damp, lint free cloth. Frequent dusting will remove abrasive build up, which can damage the finish over time.
Do not use a very wet cloth or allow any liquid to contact with the veneers for a long period of time as this can permanently damage the surface. Wipe up spills immediately.
Do not use any abrasive cleaner or harsh detergent as this can damage the surface of the furniture.
Spray polishes are best avoided as they contain silicones which may spoil the furniture's surface when building up over time.
Make sure all surfaces are protected from heat and liquids by mats and coasters.
Ensure that a mat or pad is placed under paper when you are writing on the furniture surface.
Do not place rubber, cork, vinyl or plastic materials on the wood finish as chemicals within may react with the finish if left in contact for an extended period of time.
Our furniture will endure most temperatures in the home but it is best to avoid placing furniture next to heat sources such as radiators or fires. Be particularly careful with solid wood as the lack of humidity caused by home heating can cause damage such as warping, cracking or splitting.
Excessive exposure to sunlight can cause fading of your furniture.
Avoid exposing your furniture to any liquids. All liquids should be wiped up immediately with a soft, slightly damp cloth in the direction of the wood grain. If sticky liquid residues do occur, they may be removed with a dilute solution of warm soapy water followed by a clean, damp sponge. The area should then be wiped immediately in the direction of the wood grain with a clean, soft white cloth until completely dry.
Nail polish remover, hairspray, perfume, potpourri & any other products that contains solvents can damage wood upholstery finishes.

Safety Instructions:

Never drag furniture when moving it. Always lift it.
Periodically check all fixings to ensure none have come loose. Re-tighten when necessary.
Please take care when handling or moving the furniture as careless handling may cause damage or injury.
Furniture can be dangerous if incorrectly assembled. Assembly should be carried out by a competent person.
No liability will be accepted for damage or injury caused by incorrectly installed or assembled furniture.

Heavy item warning:

It is recommended to seek assistance when moving a heavy object. Take care when lifting to avoid personal injury and (or) damage to the product.
It is recommended that before moving a heavy object to a new location it is completely dis-assembled to avoid personal injury or damage to the furniture. Please be careful to retain all fittings when doing this.

PLEASE KEEP THESE INSTRUCTIONS FOR FUTURE REFERENCE

ECR # IW 7416

25/6/14

28/6/14